HERO PLUS B

114765.02

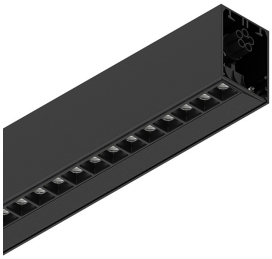

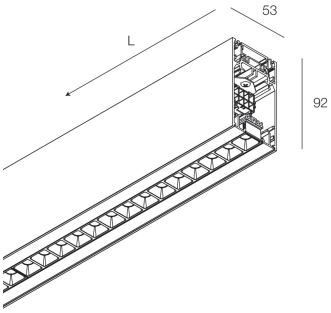

Features

Use: Indoor
Type of installation: SUSPENDED
Emission: DIRECT/INDIRECT
Optics: MICRO OPTICS
Colour: BLACK
Dimming: DALI2, PUSH
Emergency: NO
L: 1400mm
A: 53mm
H: 92mm
Made in: ITALY
Warranty: 5 years
Weight: 5kg

Tech data

Luminaire input power: 69,5W
Luminaire luminouse flux: 6722lm
Direct luminous flux: 3587lm
Indirect luminous flux: 3135lm
IP: 40
Insulation class: I
No. of driver per product: 2
Supply voltage: 220-240V 50/60Hz
UGR: <19
SELV: Sì

Source

Light source: LED
Source power: 63W
Source luminous flux: 4360lm
Colour temperature: 3000K
CRI: >90
Colour tolerance: 3 Step MacAdam
LED lifespan: 50000h L90 B10

Compliance

CEI EN 60598-1:2021 + A11:2023, CEI EN 60598-2-1:2022

Standards

Photobiological risk: RISK GROUP 0Certified fixture in EXEMPT GROUP, in accordance with CEI EN 62471:2010-01, IEC TR 62778:2014.
CAM edilizia: CAM edilizia - Conforme al Decreto Ministeriale 23 giugno 2022 n.256 e 24 novembre 2025 n.256.

Average luminance

Average luminance limits for DSE workstation 65°(in accordance to EN 12464-1:2012).

HERO PLUS B: View more product info

Novalux S.r.l. via Marzabotto, 2 40050 Funo di Argelato (BO) Italy
Tel: +39 051 860558 · Fax +39 051 6647859 · Mail: info@novalux.it · VAT number 00536541204 · novalux.com
Company subject to the management and coordination by SLV Gmbh

This technical data sheet is owned by Novalux S.r.l., all rights reserved. Novalux S.r.l. reserves the right to make changes without prior notice.
Last update: 9/6/2026, 16:14:29

HERO PLUS B

114765.02

novalux
ITALIAN LIGHTING DESIGN SINCE 1948

COMPLETION ACCESSORIES

	HERO+: KIT DI GIUNZIONE PROFILI 1PZ	**108940.99**
	HERO B: COPPIA TESTATE NE	**1087B1.02**
	HERO+B: MOD.CIECO 280 NE	**114785.02**
	HERO+B: MOD.CIECO 1120 NE	**114786.02**
	HERO+B: MOD.CIECO 1400 NE	**114787.02**
	HERO+B: MOD.CIECO 1680 NE	**114788.02**
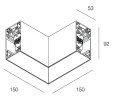	HERO+B: MOD.CIECO ANG. SX DX 150 NE	**114789.02**

MOUNTING ACCESSORIES

	KIT SOSPENSIONE HERO+B/MINI B L.1.2M 2PZ	**114794.99**
	KIT SOSPENSIONE HERO+B/MINI B L. 3M 2PZ	**114795.99**
	KIT SOSPENSIONE HERO+B/MINI B L.1.2M 3PZ	**114796.99**

Novalux S.r.l. via Marzabotto, 2 40050 Funo di Argelato (BO) Italy
Tel: +39 051 860558 · Fax +39 051 6647859 · Mail: info@novalux.it · VAT number 00536541204 · novalux.com
Company subject to the management and coordination by SLV Gmbh

This technical data sheet is owned by Novalux S.r.l., all rights reserved. Novalux S.r.l. reserves the right to make changes without prior notice.
Last update: 9/6/2026, 16:14:29

HERO PLUS B

114765.02

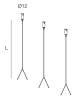	KIT SOSPENSIONE HERO+B/MINI B L. 3M 3PZ	**114797.99**
	KIT ALIMENTAZIONE L3000 3P NE	**108920.02**
	KIT ALIMENTAZIONE L3000 5P NE	**108922.02**

EMERGENCY ACCESSORIES

	HERO+: KIT 2 CAVI 1X1.5 EMERGE. L.1400	**108941.99**

Novalux S.r.l. via Marzabotto, 2 40050 Funo di Argelato (BO) Italy
Tel: +39 051 860558 · Fax +39 051 6647859 · Mail: info@novalux.it · VAT number 00536541204 · novalux.com
Company subject to the management and coordination by SLV Gmbh

This technical data sheet is owned by Novalux S.r.l., all rights reserved. Novalux S.r.l. reserves the right to make changes without prior notice.
Last update: 9/6/2026, 16:14:29