# HERO PLUS B

**114764.02**

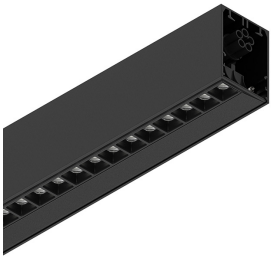

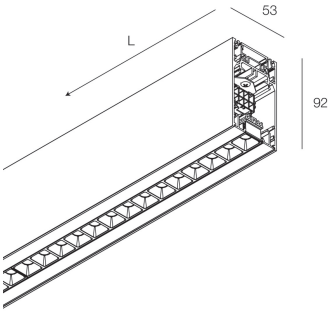


## Features

Use: Indoor
Type of installation: SUSPENDED
Emission: DIRECT/INDIRECT
Optics: MICRO OPTICS
Colour: BLACK
Dimming: DALI2, PUSH
Emergency: NO
L: 1400mm
A: 53mm
H: 92mm
Made in: ITALY
Warranty: 5 years
Weight: 5kg

## Tech data

Luminaire input power: 69,5W
Luminaire luminouse flux: 6345lm
Direct luminous flux: 3410lm
Indirect luminous flux: 2935lm
IP: 40
Insulation class: I
No. of driver per product: 2
Supply voltage: 220-240V 50/60Hz
UGR: <19
SELV: Sì

## Source

Light source: LED
Source power: 63W
Source luminous flux: 4145lm
Colour temperature: 2700K
CRI: >90
Colour tolerance: 3 Step MacAdam
LED lifespan: 50000h L90 B10

## Compliance

CEI EN 60598-1:2021 + A11:2023, CEI EN 60598-2-1:2022

## Standards

Photobiological risk: RISK GROUP 0Certified fixture in EXEMPT GROUP, in accordance with CEI EN 62471:2010-01, IEC TR 62778:2014.
CAM edilizia: CAM edilizia - Conforme al Decreto Ministeriale 23 giugno 2022 n.256 e 24 novembre 2025 n.256.

## Average luminance

Average luminance limits for DSE workstation 65°(in accordance to EN 12464-1:2012).

HERO PLUS B: View more product info

Novalux S.r.l. via Marzabotto, 2 40050 Funo di Argelato (BO) Italy
Tel: +39 051 860558 · Fax +39 051 6647859 · Mail: info@novalux.it · VAT number 00536541204 · novalux.com
Company subject to the management and coordination by SLV Gmbh



**This technical data sheet is owned by Novalux S.r.l., all rights reserved. Novalux S.r.l. reserves the right to make changes without prior notice.**
**Last update: 9/6/2026, 16:14:29**

# HERO PLUS B

**114764.02**

novalux
ITALIAN LIGHTING DESIGN SINCE 1948

## COMPLETION ACCESSORIES

| | | |
|---|---|---|
| | HERO+: KIT DI GIUNZIONE PROFILI 1PZ | **108940.99** |
| | HERO B: COPPIA TESTATE NE | **1087B1.02** |
| | HERO+B: MOD.CIECO 280 NE | **114785.02** |
| | HERO+B: MOD.CIECO 1120 NE | **114786.02** |
| | HERO+B: MOD.CIECO 1400 NE | **114787.02** |
| | HERO+B: MOD.CIECO 1680 NE | **114788.02** |
| 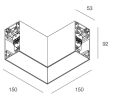 | HERO+B: MOD.CIECO ANG. SX DX 150 NE | **114789.02** |

## MOUNTING ACCESSORIES

| | | |
|---|---|---|
| | KIT SOSPENSIONE HERO+B/MINI B L.1.2M 2PZ | **114794.99** |
| | KIT SOSPENSIONE HERO+B/MINI B L. 3M 2PZ | **114795.99** |
| | KIT SOSPENSIONE HERO+B/MINI B L.1.2M 3PZ | **114796.99** |

Novalux S.r.l. via Marzabotto, 2 40050 Funo di Argelato (BO) Italy
Tel: +39 051 860558 · Fax +39 051 6647859 · Mail: info@novalux.it · VAT number 00536541204 · novalux.com
Company subject to the management and coordination by SLV Gmbh



**This technical data sheet is owned by Novalux S.r.l., all rights reserved. Novalux S.r.l. reserves the right to make changes without prior notice.**
**Last update: 9/6/2026, 16:14:29**

# HERO PLUS B

**114764.02**

| | | |
|---|---|---|
| | KIT SOSPENSIONE HERO+B/MINI B L. 3M 3PZ | **114797.99** |
| | KIT ALIMENTAZIONE L3000 3P NE | **108920.02** |
| | KIT ALIMENTAZIONE L3000 5P NE | **108922.02** |

**EMERGENCY ACCESSORIES**

| | | |
|---|---|---|
| | HERO+: KIT 2 CAVI 1X1.5 EMERGE. L.1400 | **108941.99** |

Novalux S.r.l. via Marzabotto, 2 40050 Funo di Argelato (BO) Italy
Tel: +39 051 860558 · Fax +39 051 6647859 · Mail: info@novalux.it · VAT number 00536541204 · novalux.com
Company subject to the management and coordination by SLV Gmbh



**This technical data sheet is owned by Novalux S.r.l., all rights reserved. Novalux S.r.l. reserves the right to make changes without prior notice.**
**Last update: 9/6/2026, 16:14:29**