HERO PLUS

114683.02

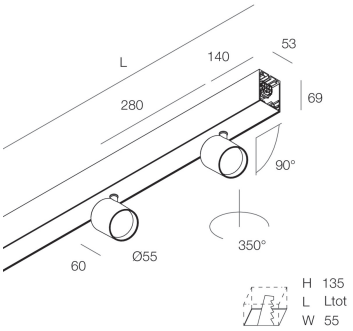

Features

Use: Indoor
Type of installation: WALL, RECESSED INTO PLASTERBOARD, SUSPENDED, CEILING MOUNTED, TRACK
Emission: DIRECT
Optics: SPOT
Beam: 34°
Colour: BLACK
Dimming: DALI2, PUSH
Emergency: NO
L: 1120mm
A: 53mm
H: 69mm
Made in: ITALY
Warranty: 5 years
Weight: 3.4kg

Tech data

Luminaire input power: 29W
Luminaire luminouse flux: 2230lm
IP: 40
Insulation class: I
No. of driver per product: 1
Supply voltage: 220-240V 50/60Hz
SELV: Sì

Source

Light source: LED
Source power: 2x13W
Source luminous flux: 2750lm
Colour temperature: 3000K
CRI: >90
Colour tolerance: 3 Step MacAdam
LED lifespan: 50000h L90 B10

Compliance

CEI EN 60598-1:2021 + A11:2023, CEI EN 60598-2-1:2022, CEI EN 60598-2-2:2012

Standards

Photobiological risk: RISK GROUP 1Certified fixture in RISK GROUP 1 (Low Risk)-The fixture does not pose a hazard due to normal behavioral limitations on exposure - in accordance with CEI EN 62471:2010-01, IEC TR 62778:2014.
CAM edilizia: CAM edilizia - Conforme al Decreto Ministeriale 23 giugno 2022 n.256 e 24 novembre 2025 n.256.

HERO PLUS: View more product info

Novalux S.r.l. via Marzabotto, 2 40050 Funo di Argelato (BO) Italy
Tel: +39 051 860558 · Fax +39 051 6647859 · Mail: info@novalux.it · VAT number 00536541204 · novalux.com
Company subject to the management and coordination by SLV Gmbh

This technical data sheet is owned by Novalux S.r.l., all rights reserved. Novalux S.r.l. reserves the right to make changes without prior notice.
Last update: 9/6/2026, 16:11:32

HERO PLUS

114683.02

novalux
ITALIAN LIGHTING DESIGN SINCE 1948

COMPLETION ACCESSORIES

	HERO+: KIT DI GIUNZIONE PROFILI 1PZ	**108940.99**
	HERO: COPPIA TESTATE NE	**108684.02**
	HERO+: MOD.CIECO 280 NE	**114685.02**
	HERO+: MOD.CIECO 1120 NE	**114686.02**
	HERO+: MOD.CIECO 1400 NE	**114687.02**
	HERO+: MOD.CIECO 1680 NE	**114688.02**
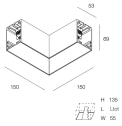	HERO+: MOD.CIECO ANG. SX DX 150 NE	**114689.02**

MOUNTING ACCESSORIES

	HERO: SOSP.L3000 1PZ TESTA W.G.ALTO	**1086A1.99**
	HERO+: SOSP L.3M REGOLA. DAL BASSO 1PZ	**114694.99**
	ALL-TRACK EVO: COPPIA ADATT. 3P BI	**106757.01**

Novalux S.r.l. via Marzabotto, 2 40050 Funo di Argelato (BO) Italy
Tel: +39 051 860558 · Fax +39 051 6647859 · Mail: info@novalux.it · VAT number 00536541204 · novalux.com
Company subject to the management and coordination by SLV Gmbh

This technical data sheet is owned by Novalux S.r.l., all rights reserved. Novalux S.r.l. reserves the right to make changes without prior notice.
Last update: 9/6/2026, 16:11:32

HERO PLUS

114683.02

	ALL-TRACK EVO: COPPIA ADATT. 3P NE	**106757.02**
	ALL-TRACK EVO: COPPIA ADATT. 3P+DALI BI	**106758.01**
	ALL-TRACK EVO: COPPIA ADATT. 3P+DALI NE	**106758.02**
	HERO: KIT INCASSO LED (1X)	**108688.99**
	HERO: SPESS. CARTONG. 10MM 2PZ.	**108689.99**
	KIT ALIMENTAZIONE L3000 5P BIA	**108922.01**
	KIT ALIMENTAZIONE L3000 5P NE	**108922.02**
	KIT ALIMENTAZIONE L3000 5P CAF	**108922.20**
	KIT ALIMENTAZIONE L3000 5P CAP	**108922.21**

EMERGENCY ACCESSORIES

	HERO+: KIT 2 CAVI 1X1.5 EMERGE. L.1400	**108941.99**

Novalux S.r.l. via Marzabotto, 2 40050 Funo di Argelato (BO) Italy
Tel: +39 051 860558 · Fax +39 051 6647859 · Mail: info@novalux.it · VAT number 00536541204 · novalux.com
Company subject to the management and coordination by SLV Gmbh

This technical data sheet is owned by Novalux S.r.l., all rights reserved. Novalux S.r.l. reserves the right to make changes without prior notice.
Last update: 9/6/2026, 16:11:32