HERO PLUS

114652.21 + 108938.99

HERO+: ANG.DX 27W 2.7K 594 CAP + HERO+: DIFF. OPALE ALTA TRASMIT ANG 594

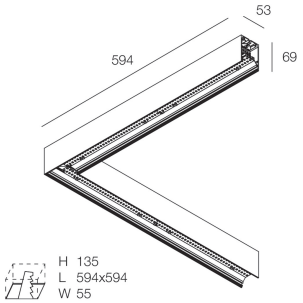

Features

Use: Indoor
Type of installation: WALL, RECESSED INTO PLASTERBOARD, SUSPENDED, CEILING MOUNTED, TRACK
Emission: DIRECT
Optics: HIGH-TRANSMITTANCE OPAL DIFFUSER
Colour: CAPPUCCINO
Dimming: ON/OFF
Emergency: NO
L: 594x594mm
A: 53mm
H: 69mm
Made in: ITALY
Warranty: 5 years
Weight: 2.1kg

Tech data

Luminaire input power: 30W
Luminaire luminouse flux: 3181lm
IP: 40
Insulation class: I
No. of driver per product: 1
Supply voltage: 220-240V 50/60Hz
SELV: Sì

Source

Light source: LED
Source power: 27W
Source luminous flux: 4152lm
Colour temperature: 2700K
CRI: >90
Colour tolerance: 3 Step MacAdam
LED lifespan: 50000h L90 B10

Compliance

CEI EN 60598-1:2021 + A11:2023, CEI EN 60598-2-1:2022, CEI EN 60598-2-2:2012

Standards

Photobiological risk: RISK GROUP 0Certified fixture in EXEMPT GROUP, in accordance with CEI EN 62471:2010-01, IEC TR 62778:2014.
CAM edilizia: CAM edilizia - Conforme al Decreto Ministeriale 23 giugno 2022 n.256 e 24 novembre 2025 n.256.

Average luminance

Average luminance limits for DSE workstation 65°(in accordance to EN 12464-1:2011).

HERO PLUS: View more product info

Novalux S.r.l. via Marzabotto, 2 40050 Funo di Argelato (BO) Italy
Tel: +39 051 860558 · Fax +39 051 6647859 · Mail: info@novalux.it · VAT number 00536541204 · novalux.com
Company subject to the management and coordination by SLV Gmbh

This technical data sheet is owned by Novalux S.r.l., all rights reserved. Novalux S.r.l. reserves the right to make changes without prior notice.
Last update: 9/6/2026, 17:12:13

HERO PLUS

114652.21 + 108938.99

HERO+: ANG.DX 27W 2.7K 594 CAP + HERO+: DIFF. OPALE ALTA TRASMIT ANG 594

Features

Use: Indoor
Optics: HIGH-TRANSMITTANCE OPAL DIFFUSER
L: 594x594mm
A: 48mm
H: 6mm
Made in: ITALY
Warranty: 5 years
Weight: 0.2kg

Tech data

IP: 40
SELV: No

Average luminance

Average luminance limits for DSE workstation 65°(in accordance to EN 12464-1:2011).

Novalux S.r.l. via Marzabotto, 2 40050 Funo di Argelato (BO) Italy
Tel: +39 051 860558 · Fax +39 051 6647859 · Mail: info@novalux.it · VAT number 00536541204 · novalux.com
Company subject to the management and coordination by SLV Gmbh

This technical data sheet is owned by Novalux S.r.l., all rights reserved. Novalux S.r.l. reserves the right to make changes without prior notice.
Last update: 9/6/2026, 17:12:13

HERO PLUS

114652.21 + 108938.99

HERO+: ANG.DX 27W 2.7K 594 CAP + HERO+: DIFF. OPALE ALTA TRASMIT ANG 594

COMPLETION ACCESSORIES

	HERO+: KIT DI GIUNZIONE PROFILI 1PZ	**108940.99**
	HERO: COPPIA TESTATE CAP	**108684.21**
	HERO+: MOD.CIECO 280 CAP	**114685.21**
	HERO+: MOD.CIECO 1120 CAP	**114686.21**
	HERO+: MOD.CIECO 1400 CAP	**114687.21**
	HERO+: MOD.CIECO 1680 CAP	**114688.21**
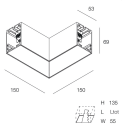	HERO+: MOD.CIECO ANG. SX DX 150 CAP	**114689.21**

MOUNTING ACCESSORIES

	HERO: SOSP.L3000 1PZ TESTA W.G.ALTO	**1086A1.99**
	HERO+: SOSP L.3M REGOLA. DAL BASSO 1PZ	**114694.99**
	ALL-TRACK EVO: COPPIA ADATT. 3P BI	**106757.01**

Novalux S.r.l. via Marzabotto, 2 40050 Funo di Argelato (BO) Italy
Tel: +39 051 860558 · Fax +39 051 6647859 · Mail: info@novalux.it · VAT number 00536541204 · novalux.com
Company subject to the management and coordination by SLV Gmbh

This technical data sheet is owned by Novalux S.r.l., all rights reserved. Novalux S.r.l. reserves the right to make changes without prior notice.
Last update: 9/6/2026, 17:12:13

HERO PLUS

114652.21 + 108938.99

HERO+: ANG.DX 27W 2.7K 594 CAP + HERO+: DIFF. OPALE ALTA TRASMIT ANG 594

	ALL-TRACK EVO: COPPIA ADATT. 3P NE	**106757.02**
	ALL-TRACK EVO: COPPIA ADATT. 3P+DALI BI	**106758.01**
	ALL-TRACK EVO: COPPIA ADATT. 3P+DALI NE	**106758.02**
	HERO: STAFFA PARETE "L" BIA	**108687.01**
	HERO: STAFFA PARETE "L" NE	**108687.02**
	HERO: STAFFA PARETE "L" CAF	**108687.20**
	HERO: STAFFA PARETE "L" CAP	**108687.21**
	HERO: KIT INCASSO LED (1X)	**108688.99**
	HERO: SPESS. CARTONG. 10MM 2PZ.	**108689.99**
	KIT ALIMENTAZIONE L3000 3P BIA	**108920.01**
	KIT ALIMENTAZIONE L3000 3P NE	**108920.02**
	KIT ALIMENTAZIONE L3000 3P CAF	**108920.20**

Novalux S.r.l. via Marzabotto, 2 40050 Funo di Argelato (BO) Italy
Tel: +39 051 860558 · Fax +39 051 6647859 · Mail: info@novalux.it · VAT number 00536541204 · novalux.com
Company subject to the management and coordination by SLV Gmbh

This technical data sheet is owned by Novalux S.r.l., all rights reserved. Novalux S.r.l. reserves the right to make changes without prior notice.
Last update: 9/6/2026, 17:12:13

HERO PLUS

114652.21 + 108938.99

HERO+: ANG.DX 27W 2.7K 594 CAP + HERO+: DIFF. OPALE ALTA TRASMIT ANG 594

	KIT ALIMENTAZIONE L3000 3P CAP	**108920.21**

Novalux S.r.l. via Marzabotto, 2 40050 Funo di Argelato (BO) Italy
Tel: +39 051 860558 · Fax +39 051 6647859 · Mail: info@novalux.it · VAT number 00536541204 · novalux.com
Company subject to the management and coordination by SLV Gmbh

This technical data sheet is owned by Novalux S.r.l., all rights reserved. Novalux S.r.l. reserves the right to make changes without prior notice.
Last update: 9/6/2026, 17:12:13