HERO B

108756.20 + 108928.99

HERO B: 103W 4K 2520 DALI CAF + HERO: DIFF. OPALE TL PER 2520

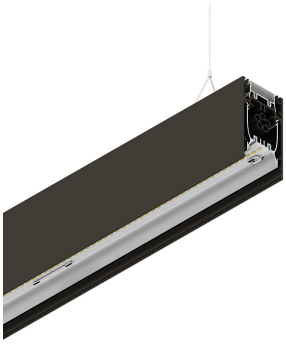

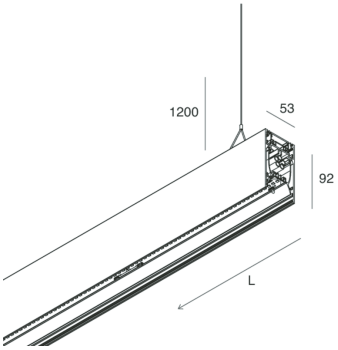

Features

Use: Indoor
Type of installation: SUSPENDED
Emission: DIRECT/INDIRECT
Optics: OPAL FULL LIGHT
Colour: CAFFE
Dimming: DALI
Emergency: NO
L: 2520mm
A: 53mm
H: 92mm
Made in: ITALY
Warranty: 5 years
Weight: 9kg

Tech data

Luminaire input power: 120.6W
Luminaire luminouse flux: 11329lm
Indirect luminous flux: 5935lm
IP: 40
Insulation class: I
No. of driver per product: 4
Supply voltage: 220-240V 50/60Hz
SELV: Sì

Source

Light source: LED
Source power: 103W
Colour temperature: 4000K
CRI: >90
Colour tolerance: 3 Step MacAdam
LED lifespan: 50000h L90 B10

Compliance

CEI EN 60598-1:2021 + A11:2023, CEI EN 60598-2-1:2022

Standards

Photobiological risk: RISK GROUP 0Certified fixture in EXEMPT GROUP, in accordance with CEI EN 62471:2010-01, IEC TR 62778:2014.
CAM edilizia: CAM edilizia - Conforme al Decreto Ministeriale 23 giugno 2022 n.256 e 24 novembre 2025 n.256.

HERO B: View more product info

Novalux S.r.l. via Marzabotto, 2 40050 Funo di Argelato (BO) Italy
Tel: +39 051 860558 · Fax +39 051 6647859 · Mail: info@novalux.it · VAT number 00536541204 · novalux.com
Company subject to the management and coordination by SLV Gmbh

This technical data sheet is owned by Novalux S.r.l., all rights reserved. Novalux S.r.l. reserves the right to make changes without prior notice.
Last update: 9/6/2026, 17:48:35

HERO B

108756.20 + 108928.99

HERO B: 103W 4K 2520 DALI CAF + HERO: DIFF. OPALE TL PER 2520



Features

Optics: OPAL FULL LIGHT
L: 2520mm
A: 52.5mm
H: 15mm
Made in: ITALY
Warranty: 5 years
Weight: 0.13kg

Tech data

IP: 40
SELV: No

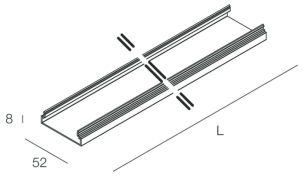

Novalux S.r.l. via Marzabotto, 2 40050 Funo di Argelato (BO) Italy
Tel: +39 051 860558 · Fax +39 051 6647859 · Mail: info@novalux.it · VAT number 00536541204 · novalux.com
Company subject to the management and coordination by SLV Gmbh

This technical data sheet is owned by Novalux S.r.l., all rights reserved. Novalux S.r.l. reserves the right to make changes without prior notice.
Last update: 9/6/2026, 17:48:35

HERO B

108756.20 + 108928.99

HERO B: 103W 4K 2520 DALI CAF + HERO: DIFF. OPALE TL PER 2520

novalux
ITALIAN LIGHTING DESIGN SINCE 1948

COMPLETION ACCESSORIES

	HERO B: COPPIA TESTATE CAF	**1087B1.20**
	HERO B: MOD.CIECO 1680 CAF	**1087A8.20**
	HERO B: MOD.CIECO 1400 CAF	**1087A7.20**
	HERO B: MOD.CIECO ANG.DX 150 CAF	**1087A5.20**
	HERO: TESTATA OPALE PER SCHERMO TL 2PZ	**108930.99**
	HERO B: MOD.CIECO 250 CAF	**1087A3.20**
	HERO B: MOD.CIECO ANG.SX 150 CAF	**1087A4.20**
	HERO B: MOD.CIECO 1120 CAF	**1087A6.20**

MOUNTING ACCESSORIES

	HERO B: KIT COPPIA CAVI SOSP. 5 M	**1087B2.99**
	KIT ALIMENTAZIONE L1200 5P BIA	**108921.01**

Novalux S.r.l. via Marzabotto, 2 40050 Funo di Argelato (BO) Italy
Tel: +39 051 860558 · Fax +39 051 6647859 · Mail: info@novalux.it · VAT number 00536541204 · novalux.com
Company subject to the management and coordination by SLV Gmbh

This technical data sheet is owned by Novalux S.r.l., all rights reserved. Novalux S.r.l. reserves the right to make changes without prior notice.
Last update: 9/6/2026, 17:48:35

HERO B

108756.20 + 108928.99

HERO B: 103W 4K 2520 DALI CAF + HERO: DIFF. OPALE TL PER 2520

	KIT ALIMENTAZIONE L3000 5P BIA	**108922.01**
	KIT ALIMENTAZIONE L3000 5P CAF	**108922.20**
	KIT ALIMENTAZIONE L1200 5P CAF	**108921.20**

Novalux S.r.l. via Marzabotto, 2 40050 Funo di Argelato (BO) Italy
Tel: +39 051 860558 · Fax +39 051 6647859 · Mail: info@novalux.it · VAT number 00536541204 · novalux.com
Company subject to the management and coordination by SLV Gmbh

This technical data sheet is owned by Novalux S.r.l., all rights reserved. Novalux S.r.l. reserves the right to make changes without prior notice.
Last update: 9/6/2026, 17:48:35