HERO B

108750.01 + 108916.99

HERO B: 113W 3K 2800 DALI BIA + HERO: DIFF.MICROPRISM. PER 2800

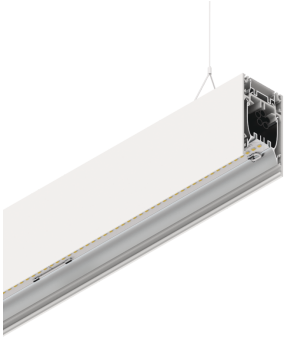

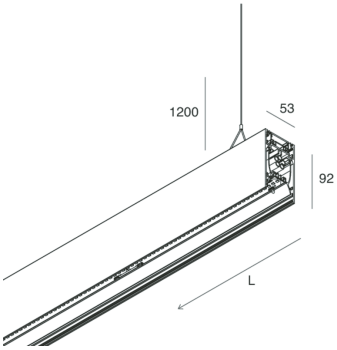

Features

Use: Indoor
Type of installation: SUSPENDED
Emission: DIRECT/INDIRECT
Optics: MICROPRISMATIZED
Colour: WHITE
Dimming: DALI
Emergency: NO
L: 2800mm
A: 53mm
H: 92mm
Made in: ITALY
Warranty: 5 years
Weight: 10kg

Tech data

Luminaire input power: 132.5W
Luminaire luminouse flux: 11694lm
Indirect luminous flux: 6367lm
IP: 40
Insulation class: I
No. of driver per product: 4
Supply voltage: 220-240V 50/60Hz
UGR: <19
SELV: Sì

Source

Light source: LED
Source power: 113W
Colour temperature: 3000K
CRI: >90
Colour tolerance: 3 Step MacAdam
LED lifespan: 50000h L90 B10

Compliance

CEI EN 60598-1:2021 + A11:2023, CEI EN 60598-2-1:2022

Standards

Photobiological risk: RISK GROUP 0Certified fixture in EXEMPT GROUP, in accordance with CEI EN 62471:2010-01, IEC TR 62778:2014.
CAM edilizia: CAM edilizia - Conforme al Decreto Ministeriale 23 giugno 2022 n.256 e 24 novembre 2025 n.256.

HERO B: View more product info

Novalux S.r.l. via Marzabotto, 2 40050 Funo di Argelato (BO) Italy
Tel: +39 051 860558 · Fax +39 051 6647859 · Mail: info@novalux.it · VAT number 00536541204 · novalux.com
Company subject to the management and coordination by SLV Gmbh

This technical data sheet is owned by Novalux S.r.l., all rights reserved. Novalux S.r.l. reserves the right to make changes without prior notice.
Last update: 9/6/2026, 17:57:29

HERO B

108750.01 + 108916.99

HERO B: 113W 3K 2800 DALI BIA + HERO: DIFF.MICROPRISM. PER 2800

Features

Optics: MICROPRISMATIZED
L: 2800mm
A: 48mm
H: 6mm
Made in: ITALY
Warranty: 5 years
Weight: 0.6kg

Tech data

IP: 40
UGR: <19
SELV: No

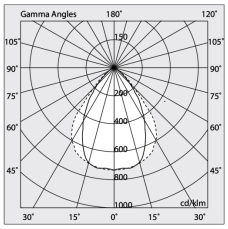

This technical data sheet is owned by Novalux S.r.l., all rights reserved. Novalux S.r.l. reserves the right to make changes without prior notice.

Last update: 9/6/2026, 17:57:29

HERO B

108750.01 + 108916.99

HERO B: 113W 3K 2800 DALI BIA + HERO: DIFF.MICROPRISM. PER 2800

COMPLETION ACCESSORIES

	HERO B: MOD.CIECO ANG.DX 150 BIA	**1087A5.01**
	HERO B: MOD.CIECO 250 BIA	**1087A3.01**
	HERO B: MOD.CIECO 1680 BIA	**1087A8.01**
	HERO: TESTATA OPALE PER SCHERMO TL 2PZ	**108930.99**
	HERO B: MOD.CIECO 1400 BIA	**1087A7.01**
	HERO B: MOD.CIECO ANG.SX 150 BIA	**1087A4.01**
	HERO B: COPPIA TESTATE BIA	**1087B1.01**
	HERO B: MOD.CIECO 1120 BIA	**1087A6.01**

MOUNTING ACCESSORIES

	HERO B: KIT COPPIA CAVI SOSP. 5 M	**1087B2.99**
	KIT ALIMENTAZIONE L1200 5P BIA	**108921.01**

Novalux S.r.l. via Marzabotto, 2 40050 Funo di Argelato (BO) Italy
Tel: +39 051 860558 · Fax +39 051 6647859 · Mail: info@novalux.it · VAT number 00536541204 · novalux.com
Company subject to the management and coordination by SLV Gmbh

This technical data sheet is owned by Novalux S.r.l., all rights reserved. Novalux S.r.l. reserves the right to make changes without prior notice.
Last update: 9/6/2026, 17:57:29

HERO B

108750.01 + 108916.99

HERO B: 113W 3K 2800 DALI BIA + HERO: DIFF.MICROPRISM. PER 2800

KIT ALIMENTAZIONE L3000 5P BIA **108922.01**

Novalux S.r.l. via Marzabotto, 2 40050 Funo di Argelato (BO) Italy
Tel: +39 051 860558 · Fax +39 051 6647859 · Mail: info@novalux.it · VAT number 00536541204 · novalux.com
Company subject to the management and coordination by SLV Gmbh

This technical data sheet is owned by Novalux S.r.l., all rights reserved. Novalux S.r.l. reserves the right to make changes without prior notice.
Last update: 9/6/2026, 17:57:29