HERO

108665.01 + 108917.99

HERO: ANG.DX 24W 3K 589 DALI BIA + HERO: ANG.2 DIFF.MICROPRISM.L589

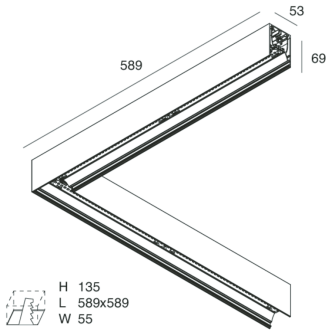

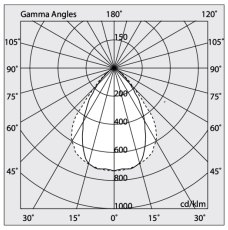

Features

Use: Indoor
Type of installation: WALL, RECESSED INTO PLASTERBOARD, SUSPENDED, CEILING MOUNTED, TRACK
Emission: DIRECT
Optics: MICROPRISMATIZED
Colour: WHITE
Dimming: PUSH, DALI
Emergency: NO
L: 589x589mm
A: 53mm
H: 69mm
Made in: ITALY
Warranty: 5 years
Weight: 2.1kg

Tech data

Luminaire input power: 28.5W
Luminaire luminouse flux: 2131lm
IP: 40
Insulation class: I
No. of driver per product: 1
Supply voltage: 220-240V 50/60Hz
UGR: <19
SELV: Sì

Source

Light source: LED
Source power: 24W
Colour temperature: 3000K
CRI: >90
Colour tolerance: 3 Step MacAdam
LED lifespan: 50000h L90 B10

Compliance

CEI EN 60598-1:2021 + A11:2023, CEI EN 60598-2-1:2022, CEI EN 60598-2-2:2012

Standards

Photobiological risk: RISK GROUP 0Certified fixture in EXEMPT GROUP, in accordance with CEI EN 62471:2010-01, IEC TR 62778:2014.
CAM edilizia: CAM edilizia - Conforme al Decreto Ministeriale 23 giugno 2022 n.256 e 24 novembre 2025 n.256.

Average luminance

Average luminance limits for DSE workstation 65°(in accordance to EN 12464-1:2012).

HERO: View more product info

Novalux S.r.l. via Marzabotto, 2 40050 Funo di Argelato (BO) Italy
Tel: +39 051 860558 · Fax +39 051 6647859 · Mail: info@novalux.it · VAT number 00536541204 · novalux.com
Company subject to the management and coordination by SLV Gmbh

This technical data sheet is owned by Novalux S.r.l., all rights reserved. Novalux S.r.l. reserves the right to make changes without prior notice.
Last update: 9/6/2026, 17:38:51

HERO

108665.01 + 108917.99

HERO: ANG.DX 24W 3K 589 DALI BIA + HERO: ANG.2 DIFF.MICROPRISM.L589

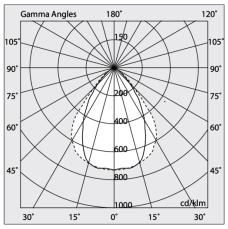

Features

Use: Indoor
Optics: MICROPRISMATIZED
L: 589x589mm
A: 48mm
H: 6mm
Made in: ITALY
Warranty: 5 years
Weight: 0.2kg

Tech data

IP: 40
UGR: <19

Average luminance

Average luminance limits for DSE workstation 65°(in accordance to EN 12464-1:2012).

This technical data sheet is owned by Novalux S.r.l., all rights reserved. Novalux S.r.l. reserves the right to make changes without prior notice.

Last update: 9/6/2026, 17:38:51

HERO

108665.01 + 108917.99

HERO: ANG.DX 24W 3K 589 DALI BIA + HERO: ANG.2 DIFF.MICROPRISM.L589

COMPLETION ACCESSORIES

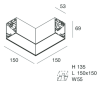	HERO: MOD.CIECO ANG.SX 150 BIA	**108677.01**
	HERO: MOD.CIECO 1680 BIA	**108681.01**
	HERO: MOD.CIECO 1400 BIA	**108680.01**
	HERO: MOD.CIECO 250 BIA	**108676.01**
	HERO: MOD.CIECO 1120 BIA	**108679.01**
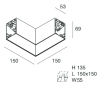	HERO: MOD.CIECO ANG.DX 150 BIA	**108678.01**

MOUNTING ACCESSORIES

	KIT ALIMENTAZIONE L1200 5P BIA	**108921.01**
	HERO: SOSP.L3000 1PZ TESTA W.G.BASSO	**108685.99**
	KIT ALIMENTAZIONE L3000 5P BIA	**108922.01**
	HERO: STAFFA PARETE "L" BIA	**108687.01**

Novalux S.r.l. via Marzabotto, 2 40050 Funo di Argelato (BO) Italy
Tel: +39 051 860558 · Fax +39 051 6647859 · Mail: info@novalux.it · VAT number 00536541204 · novalux.com
Company subject to the management and coordination by SLV Gmbh

This technical data sheet is owned by Novalux S.r.l., all rights reserved. Novalux S.r.l. reserves the right to make changes without prior notice.
Last update: 9/6/2026, 17:38:51

HERO

108665.01 + 108917.99

HERO: ANG.DX 24W 3K 589 DALI BIA + HERO: ANG.2 DIFF.MICROPRISM.L589

	HERO: SPESS. CARTONG. 10MM 2PZ.	**108689.99**
	HERO: SOSP.L3000 1PZ UNIONE W.G.BASSO	**108686.99**
	HERO: SOSP.L3000 1PZ TESTA W.G.ALTO	**1086A1.99**
	HERO: KIT INCASSO LED (1X)	**108688.99**
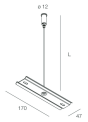	HERO: SOSP.L3000 1PZ UNIONE W.G.ALTO	**1086A2.99**

Novalux S.r.l. via Marzabotto, 2 40050 Funo di Argelato (BO) Italy
Tel: +39 051 860558 · Fax +39 051 6647859 · Mail: info@novalux.it · VAT number 00536541204 · novalux.com
Company subject to the management and coordination by SLV Gmbh

This technical data sheet is owned by Novalux S.r.l., all rights reserved. Novalux S.r.l. reserves the right to make changes without prior notice.
Last update: 9/6/2026, 17:38:51